SIX

Signal Isolator/Converter

USER'S MANUAL

May 1991

No. 297-701-00 B

© 1991 by Moore Industries-International, Inc.

Table of Contents

Introduction	**1**
Description	**1**
Calibration	**1**
Installation	**5**
Operation	**7**
Maintenance	**7**
Troubleshooting	**7**

48 HR. DELIVERY



United States/Canada TOLL FREE 1-800-999-2900	16650 Schoenborn Street Sepulveda, California 91343, U.S.A. Tel: (818) 894-7111 • Tlx: 65-1322 FAX: (818) 891-3297 CONNECT (MacNet): MIISEPULVEDA
United Kingdom FREEPHONE 0800525107	1 Lloyds Court, Manor Royal, Crawley W. Sussex RH10-2QU, United Kingdom Tel: 0293 514488 • Tlx: 87667 FAX: 0293 536852
Australia TOLL FREE 008251928	3/18 Resolution Drive, Caringbah New South Wales 2229, Australia Tel: (02) 525-9177 • Tlx: 790-75914 FAX: (02) 525-7296

Ask for the STAR Center

Moore Industries' STAR* Center has a wide variety of quality instrumentation in stock and ready to ship.

- Signal Transmitters
- Temperature Transmitters
- P/I and I/P Converters
- Isolators and Converters
- Indicators and Displays
- Alarm Trips
- Integrators and Totalizers
- Power Transducers
- Instrument Power Supplies
- Racks, Rails and Enclosures

Most instruments can be customized to meet your needs. Even then, you'll never have to wait more than a few days.

Moore Industries
STAR
CENTER

* Support, Technical Assistance, and Repair (our Quick-Ship Facility)

Introduction

Moore Industries' Signal Isolator/Converter (SIX) is a DIN-style, loop-powered device, used to provide complete isolation of instrumentation input and output. This helps eliminate faulty readings in measurement and control equipment caused by ground loops, electrical interference, or motor noise.

This manual provides a brief description of the SIX, a list of performance and functional specifications, a calibration procedure, operations notes, and trouble-shooting information.

Notes and Cautions, where they appear in text or illustrations, are provided to assist the user in avoiding operational inconveniences (Notes), or practices that otherwise might result in damage to the unit (Cautions).

Description

The SIX is loop-powered. When connected in a 12-42 Vdc loop, it converts a standard process current or voltage signal to a proportional, isolated 4-20 or 10-50 mA output; breaking the galvanic path between a transmitted signal source and its receiving device.

The unit is packaged in a compact, DIN-style housing that snaps easily on to G-rail mounting hardware (DIN EN50035). This makes it ideal for use in high density installations.

Controls

The SIX has Zero and Span potentiometers located on the front panel of the unit. On older units these were labeled:

for Zero, and

for Span.

On newer the words "ZERO" and "SPAN" may be used to identify the potentiometers.

Table 1 consists of the SIX performance and functional specifications.

Options

Units may be ordered with RFI-filtered terminals and case assembly (RF Option). RF-equipped units provide RFI/EMI protection up to 50V/M - abc = ±0.1% F.S., as defined by SAMA standard 33.1.

Contact your Sales Representative or Moore Industries for more information on available SIX options and compatible devices.

Serial Number. A complete history of every unit sold and serviced by Moore Industries is kept at the factory. This data is keyed to each unit's serial number. If service data is required on an SIX, providing the factory with the unit serial number will allow our highly skilled technicians to better assist you.

The SIX serial number is located on a label affixed to the side panel of the unit.

Model Number. Moore Industries' model numbers identify the type of instrument, functional characteristics, operating parameters, any options ordered, and housing type. If all accompanying documentation for a unit is missing, the model number may be used to obtain technical information.

The model number for the SIX is located on the same label as its serial number.

The example following Table 1 is provided to assist in deciphering the fields of the SIX model number.

Calibration

Prior to unit shipment, each SIX is calibrated and tested according to Moore Industries' strict quality control guidelines. It is recommended, however, that a bench check of potentiometer settings and output levels be performed before placing the SIX into service.

Table 1. SIX Specifications

Characteristics	Specifications
Input	**Factory-set.** Available ranges are: 0 to 20 mA 4 to 20 mA –1 to +1 mA 0 to 10 V 1 to 5 V 0 to 1 V
Output	**Factory-set.** 4 to 20, or 10 to 50 mA.
Power	2-wire loop-power; 12 to 42 Vdc.
Performance	**Isolation:** Input and output are transformer-isolated with no galvanic path (dc connection) up to 500 Vrms. **Frequency Response:** 10 Hz at the 3 dB point. **Maximum Input Over-range:** ±60 V **Input Impedance:** 1.0 Mý for voltage inputs; 50ý for 4-20 mA input; 1 Ký for –1 to +1 mA input. **Load Capability:** 4-20 mA into 1500ý; limited to 50 mA, maximum. **Power Supply Effect:** Less than 0.05% of span over the full power supply range.
Adjustability	**Calibration Accuracy:** ±0.1% of span. Zero potentiometer adjusts unit zero to within ±5% of span. Span potentiometer allows for 100% adjustment, ±10%, with full-scale input.
Environmental Ratings	**RFI/EMI Effect:** Without RF Option, effect is negligible @ 25 V/m at typical communications frequencies. With RF, protection of 50 V/m-abc = ±0.1% F.S., as defined by SAMA Standard 33.1. **Ambient Operating Temperature Range:** –30 to +82 °C (–22 to +180 °F). **Temperature Change Effect on Unit Operation:** 0.015% of span per °C change over a 0 to 70 °C range.
Weight	Approximately 215 grams (7.6 ounces).
NOTE: Refer to Installation Section of this manual for unit dimensions.	

Calibration Equipment

Table 2 lists the calibration equipment required for this bench check procedure. This equipment is not supplied with the unit.

Calibration Setup

Figure 1 shows the calibration setup for the SIX. To check or calibrate the SIX, connect the unit as shown in the illustration, and apply the power according specification (refer to the specifications table and the model number of your unit).

EXAMPLE

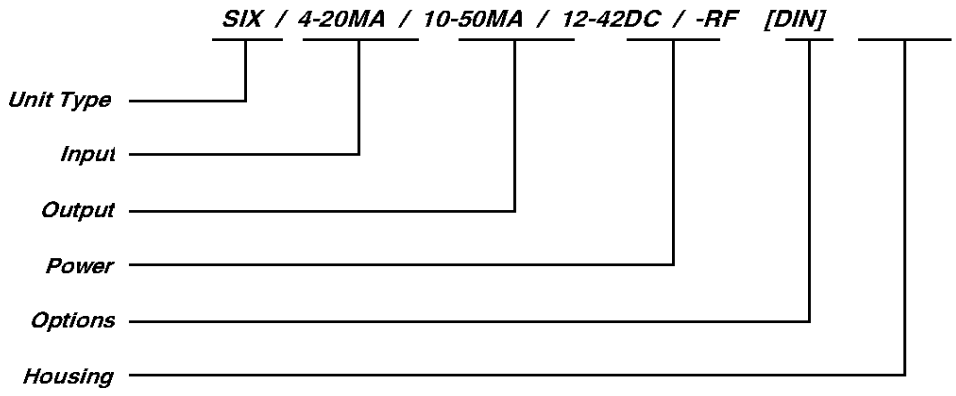

Table 2. *SIX Calibration Equipment*

Equipment	Characteristics
Signal Source	Appropriate for the intended SIX application, accurate to within ±0.05% of span, minimum
DC milliammeter or DC voltmeter with Precision resistor	Fluke model 8899, or equivalent unit accurate to within ±0.05% of span, minimum. Voltmeter accurate to within ±0.05% of span, minimum. Resistor: 250 (±0.1%), rated for 4-20 mA.
Power Supply	Capable of 12 to 42 Vdc.
Screwdriver	Slotted head, width 2.54 mm (0.1 inch).

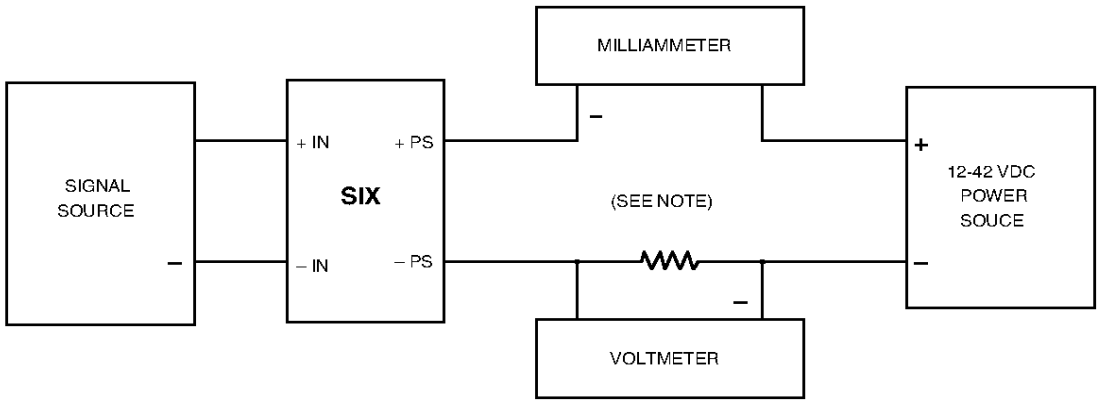

NOTE: Either milliammeter or voltmeter may be used for monitoring output.

Figure 1. *SIX Calibration Setup*

Note that there are no internal adjustments or settings to effect on the SIX. Disassembly of any kind is not recommended.

After applying power, allow approximately five minutes for stabilization/warm-up.

Calibration Procedures

There are two options for monitoring the output of the SIX shown in the figures; either a dc milliammeter or a dc voltmeter with load resistor may be used to monitor and set output levels.

1. With the calibration setup complete, adjust both potentiometers 15 turns counterclockwise, then 7.5 turns clockwise (mid-scale).
2. Simulate zero percent input.
3. Adjust zero potentiometer until milliammeter reads 4 mA for 4-20 mA units, 10 mA for 10-50 mA units, or until voltmeter reads 1 volt.

CAUTION

To avoid damaging the housings, use a screwdriver with a head not wider than 2.54 mm (0.1 inch) to adjust the zero and span potentiometers.

4. Set input to 100 percent.
5. Adjust span potentiometer until milliammeter reads 20 mA for 4-20 mA units, 50 mA for 10-50 mA units, or until voltmeter reads 5 volts.
6. Repeat steps 2 through 5 until zero and 100 percent readings are stable, ±0.1%.

Installation

In this manual, the installation of the SIX is divided into two phases: physically mounting the unit, and making the electrical connections. It is recommended that the unit(s) be mounted before making any connections.

Mounting

When mounting the SIX, make every effort to install it in an area that is relatively free of dust, moisture, and corrosive materials.

Figure 2 shows the mounting dimensions for the SIX.

To mount the unit on a DIN-style G-rail, insert the metal clip on the unit's back panel under the top lip of the rail. Pivoting on the clip, press down firmly until the SIX snaps into place.

If it becomes necessary to remove the unit, grasp the bottom of its front panel and lift upward.

NOTE

The SIX has no case ground connection. If possible, avoid mounting the unit in any electrical field. Secure the case to a good conductor at zero potential.

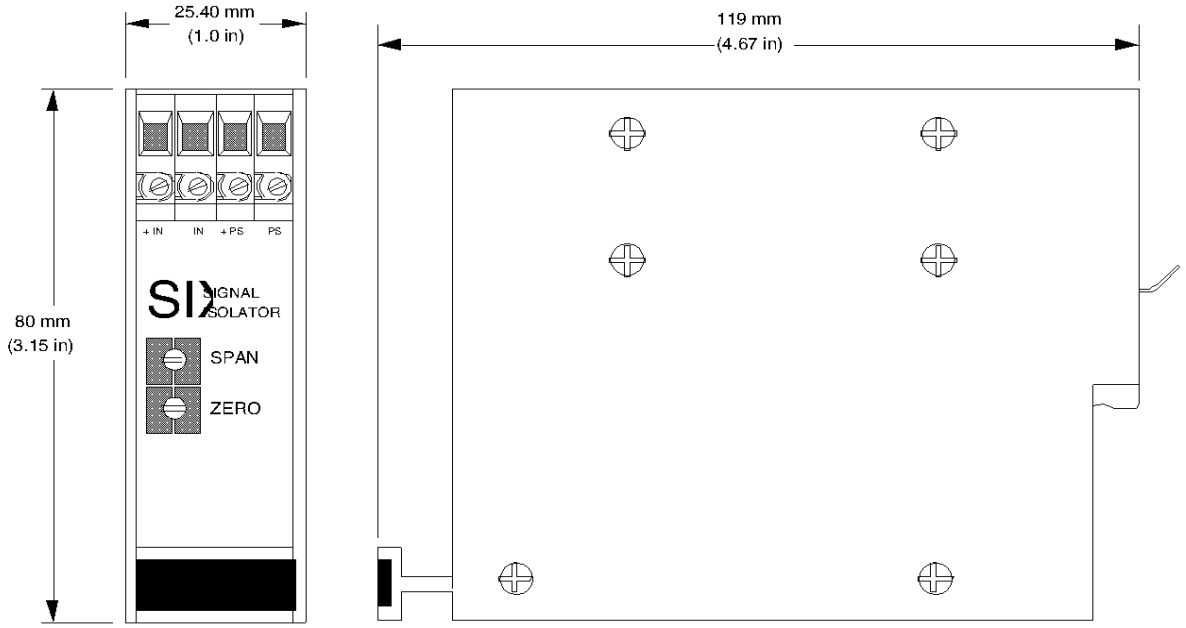

Figure 2. *SIX Outline Dimensions*

Electrical Connections

The SIX has four terminals on its front panel. They are labeled "+IN" and "–IN" for connection of the signal input, and "+PS" and "–PS" for connection of the unit's output.

Figure 3 illustrates the connection of the SIX in a generic application.

Figure 4 shows the unit connected in another typical operational scenario.

To complete these connections, use a small, slotted screwdriver to loosen the SIX terminal screws, and slip the appropriate stripped wire end into the terminal hole. Tighten the terminal screw.

Both the input and output may be grounded. The SIX input and output are transformer-isolated with no dc connection between them. This isolation provides 67 dB common mode rejection, and allows the input to float with respect to the output.

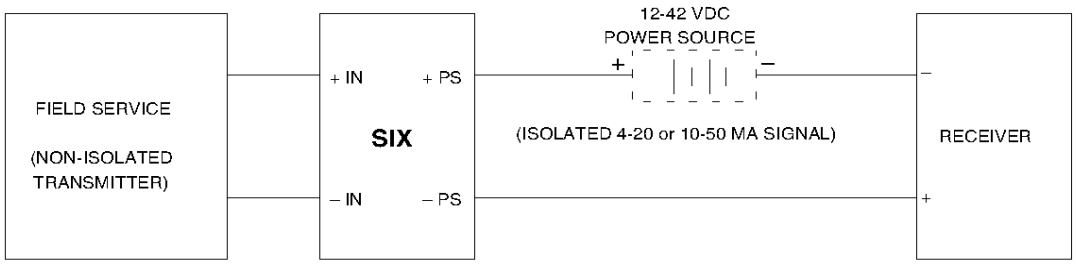

Figure 3. *SIX Typical Installation Hookup*

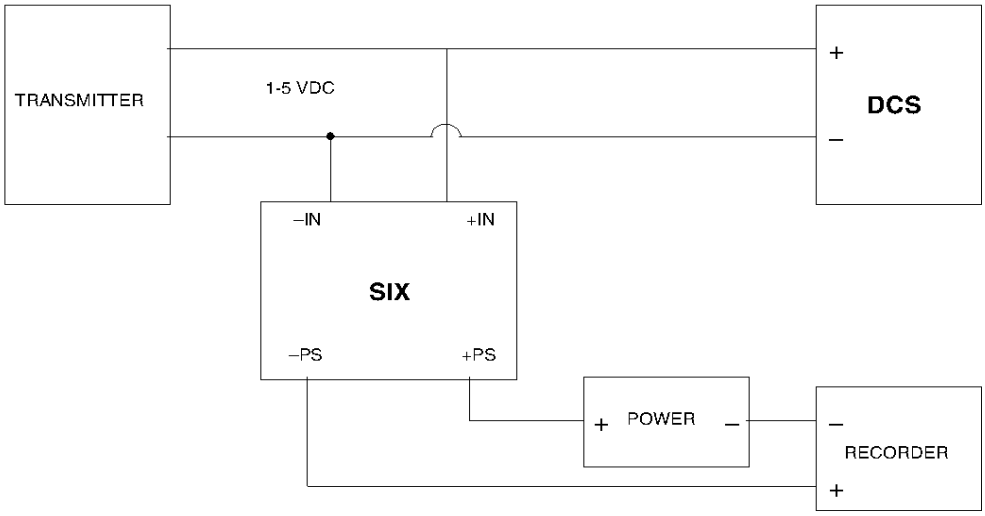

Figure 4. *SIX Installed as a Repeater/Diverter*

Operation

Once mounted and connected according to the instructions, the SIX operates unattended. After the initial calibration of the Zero and Span potentiometers, no further adjustment is required.

Maintenance

A check of terminal connections is recommended every six months. Ensure that all terminal screws are tight and free of corrosion. Check that adequate ventilation exists, or that heat sinking materials are used in mounting.

Troubleshooting

If the SIX is found to be performing below specification, complete the following checklist:

1. Make sure all connections are clean and tight.
2. Verify the accuracy and calibration of bench instruments used to take measurements.
3. Ensure that signal and power levels in the instrumentation loop have not changed since the unit was installed. Make sure that power is within specified limits (refer to table 1).

If problems persist, note the serial and model numbers of the offending unit, and contact Moore Industries' Customer Service Department. Instructions for return of Moore Industries equipment are on the back cover of this manual.